This document and the data disclosed herein or herewith is not to be reproduced, used, or disclosed in whole or in part to anyone without the written permission of THAT Corporation.

Rev	Description	Date	Approved

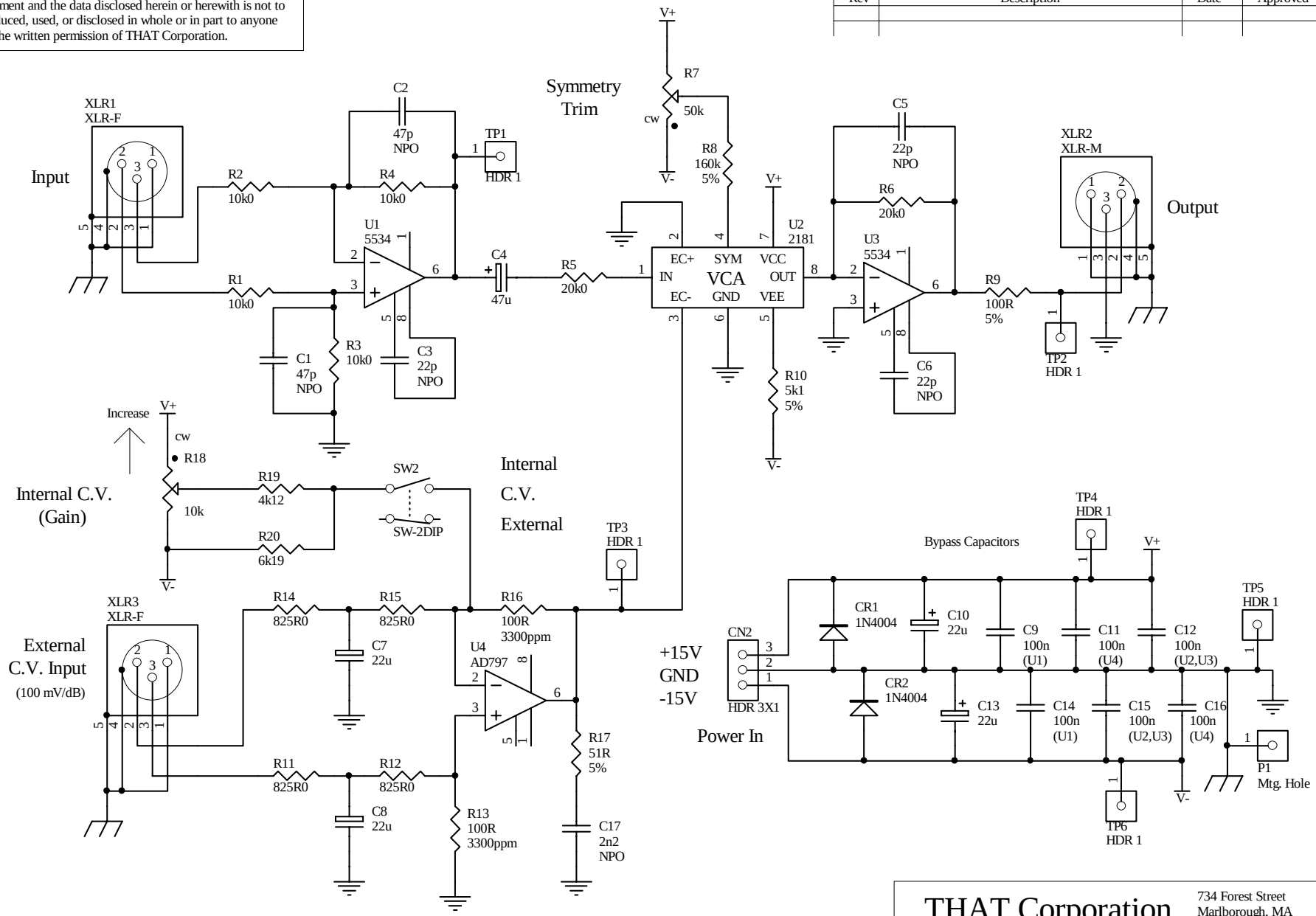

Unless otherwise noted:
1. All resistors are 1/4W, 1%, M.F. types.
2. All capacitors are 20% tolerance.
3. All NPO capacitors are 5% tolerance.

TYPE	AD797	5534
DES	U4	U1, U3
+15	7	7
-15	4	4

Checked:		Date:	
Proj. Eng.:	GKH	Date:	9/14/95
Chf. Eng.:	GKH	Date:	9/14/95
Production:		Date:	

THAT Corporation
734 Forest Street
Marlborough, MA
508-229-2500

Title: 2181 Demo Board Schematic

Size: A	Drawing Number: 330195	Revision: 01
Date: 26-Oct-2004	Drawn by:	Sheet 1 of 1
File: C:\temp\195-0101.SCH		